Chapter 3

VLSM

Now that IP addressing and subnetting have been thoroughly covered in the last two chapters, you're fully prepared and ready to learn all about variable length subnet masks (VLSMs). I'll also show you how to design and implement a network using VLSM in this chapter. After ensuring you've mastered VLSM design and implementation, I'll demonstrate how to summarize classful boundaries.

6.1 Definition

Teaching you a simple way to create many networks from a large single network using subnet masks of different lengths in various kinds of network designs is what my primary focus will be in this chapter. Doing this is called VLSM networking.

Older routing protocols like Routing Information Protocol version 1 (RIPv1) do not have a field for subnet information, so the subnet information gets dropped. This means that if a router running RIP has a subnet mask of a certain value, it assumes that *all* interfaces within the classful address space have the same subnet mask. This is called classful routing, and RIP is considered a classful routing protocol. We'll cover RIP and the difference between classful and classless networks later, "IP Routing," but for now, just remember that if you try to mix and match subnet mask lengths in a network that's running an old routing protocol, such as RIP, it just won't work!

However, classless routing protocols do support the advertisement of subnet information, which means you can use VLSM with routing protocols such as RIPv2, Enhanced Interior Gateway Protocol (EIGRP), and Open Shortest Path First (OSPF). The benefit of this type of network is that it saves a bunch of IP address space.

As the name suggests, VLSMs can use subnet masks with different lengths for different router interfaces. Check out Figure 3.1 to see an example of why classful network designs are inefficient.

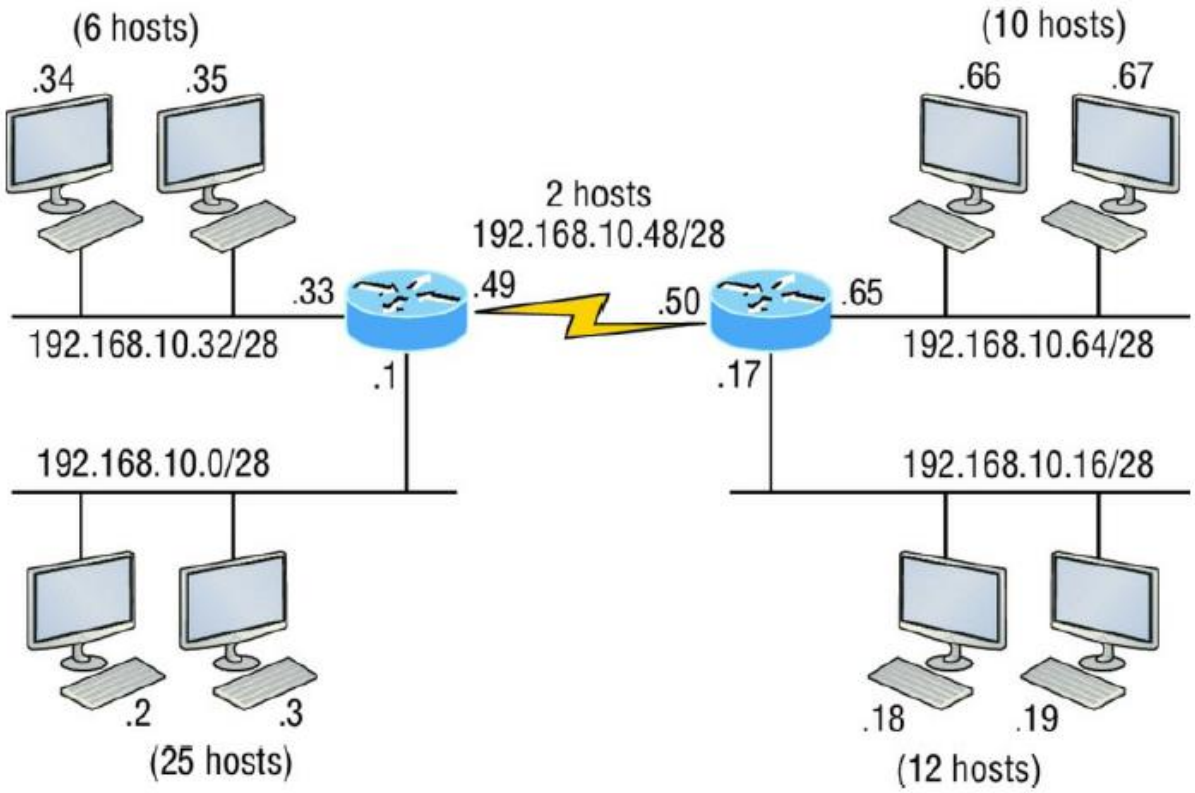

Figure 3.1 Typical Classful Network

Looking at Figure 3.1, you can see that there are two routers, each with two LANs and connected together with a WAN serial link. In a typical classful network design that's running RIP, you could subnet a network like this:
192.168.10.0 = Network
255.255.255.240 (/28) = Mask
Our subnets would be—you know this part, right? 0, 16, 32, 48, 64, 80, etc., which allows us to assign 16 subnets to our internetwork. But how many hosts would be available on each network? Well, as you know by now, each subnet provides only 14 hosts, so each LAN has only 14 valid hosts available (don't forget that the router interface needs an address too and is included in the amount of needed valid hosts). This means that one LAN doesn't even have enough addresses needed for all the hosts, and this network as it is shown would not work as addressed in the figure! Since the point-to-point WAN link also has 14 valid hosts, it would be great to be able to nick a few valid hosts from that WAN link to give to our LANs!

All hosts and router interfaces have the same subnet mask—again, known as classful routing—and if we want this network to be efficient, we would definitely need to add different masks to each router interface.

But that's not our only problem—the link between the two routers will never use more than two valid hosts! This wastes valuable IP address space, and it's the big reason you need to learn about VLSM network design.

6.2 VLSM Design

Let's take Figure 3.1 and use a classless design instead, which will become the new network shown in Figure 3.2. In the previous example, we wasted address space—one LAN didn't have enough addresses because every router interface and host used the same subnet mask. Not so good. A better solution would be to provide for only the needed number of hosts on each router interface, and we're going to use VLSMs to achieve that goal.

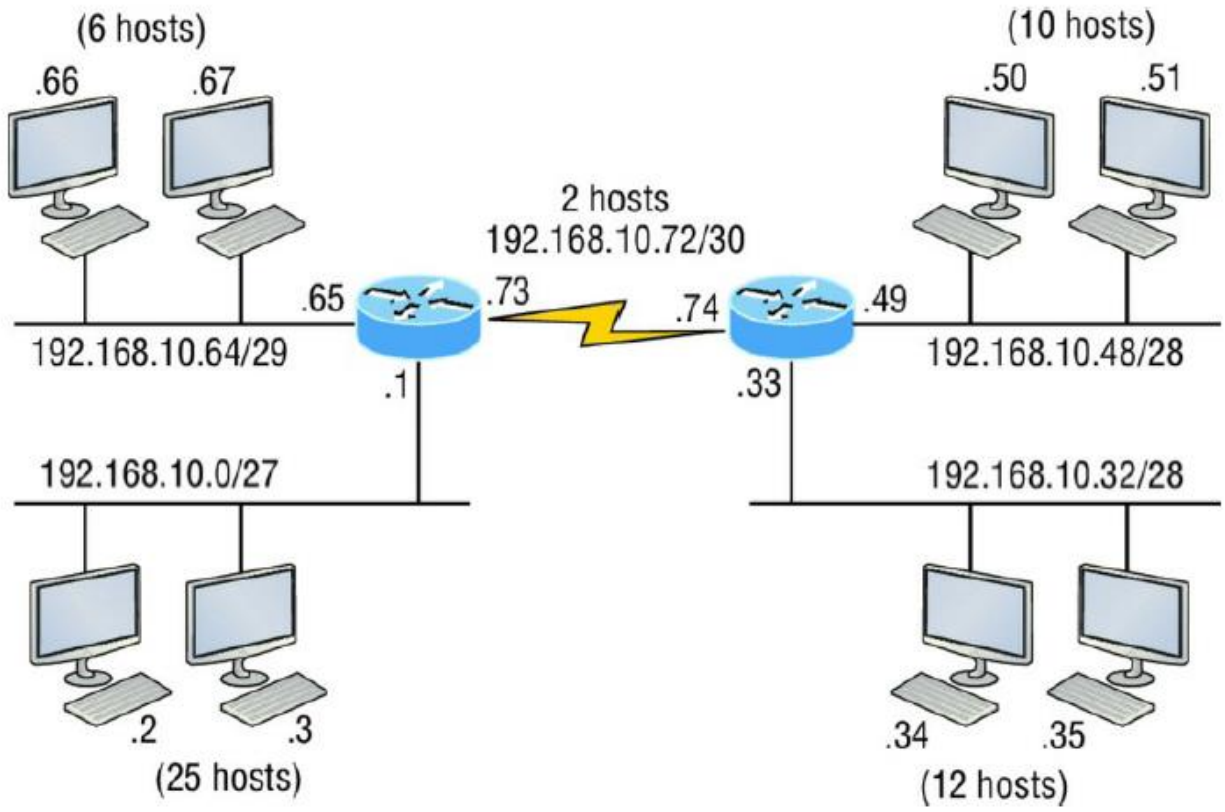

Figure 3.2 Classless Network Design

Now remember that we can use different size masks on each router interface. If we use a /30 on our WAN links and a /27, /28, and /29 on our LANs, we'll get 2 hosts per WAN interface and 30, 14, and 6 hosts per LAN interface—nice (remember to count your router interface as a host)! This makes a huge difference—not only can we get just the right amount of hosts on each LAN, we still have room to add more WANs and LANs using this same network!

6.3 Implementing VLSM Networks

To create VLSMs quickly and efficiently, you need to understand how block sizes and charts work together to create the VLSM masks. Table 3.1 shows you the block sizes used when creating VLSMs with Class C networks. For example, if you need 25 hosts, then you'll need a block size of 32. If you need 11 hosts, you'll use a block size of 16. Need 40 hosts? Then you'll need a block of

64. You cannot just make up block sizes—they've got to be the block sizes shown in Table 3.1. So memorize the block sizes in this table—it's easy. They're the same numbers we used with subnetting!

Prefix	Mask	Hosts	Block Size
/25	128	126	128
/26	192	62	64
/27	224	30	32
/28	240	14	16
/29	248	6	8
/30	252	2	4

The next step is to create a VLSM table. Figure 3.3 shows you the table used in creating a VLSM network. The reason we use this table is so we don't accidentally overlap networks.

You'll find the sheet shown in Figure 3.3 very valuable because it lists every block size you can use for a network address. Notice that the block sizes start at 4 and advance all the way up to a block size of 128. If you have two networks with block sizes of 128, you can have only 2 networks. With a block size of 64, you can have only 4, and so on, all the way to 64 networks using a block size of 4. Of course, this is assuming you're using the ip subnet-zero command in your network design.

So now all you need to do is fill in the chart in the lower-left corner, then add the subnets to the worksheet and you're good to go!

Based on what you've learned so far about block sizes and the VLSM table, let's create a VLSM network using a Class C network address 192.168.10.0 for the network in Figure 3.4, then fill out the VLSM table, as shown in Figure 3.5.

In Figure 3.4, we have four WAN links and four LANs connected together, so we need to create a VLSM network that will save address space. Looks like we have two block sizes of 32, a block size of 16, and a block size of 8, and our WANs each have a block size of 4. Take a look and see how is filled out our VLSM chart in Figure 3.5.

Subnet	Mask	Subnets	Hosts	Block
/25	128	2	126	128
/26	192	4	62	64
/27	224	8	30	32
/28	240	16	14	16
/29	248	32	6	8
/30	252	64	2	4

Network	Hosts	Block	Subnet	Mask
A				
B				
C				
D				
E				
F				
G				
H				
I				
J				
K				
L				

Figure 3.3 The VLSM Table

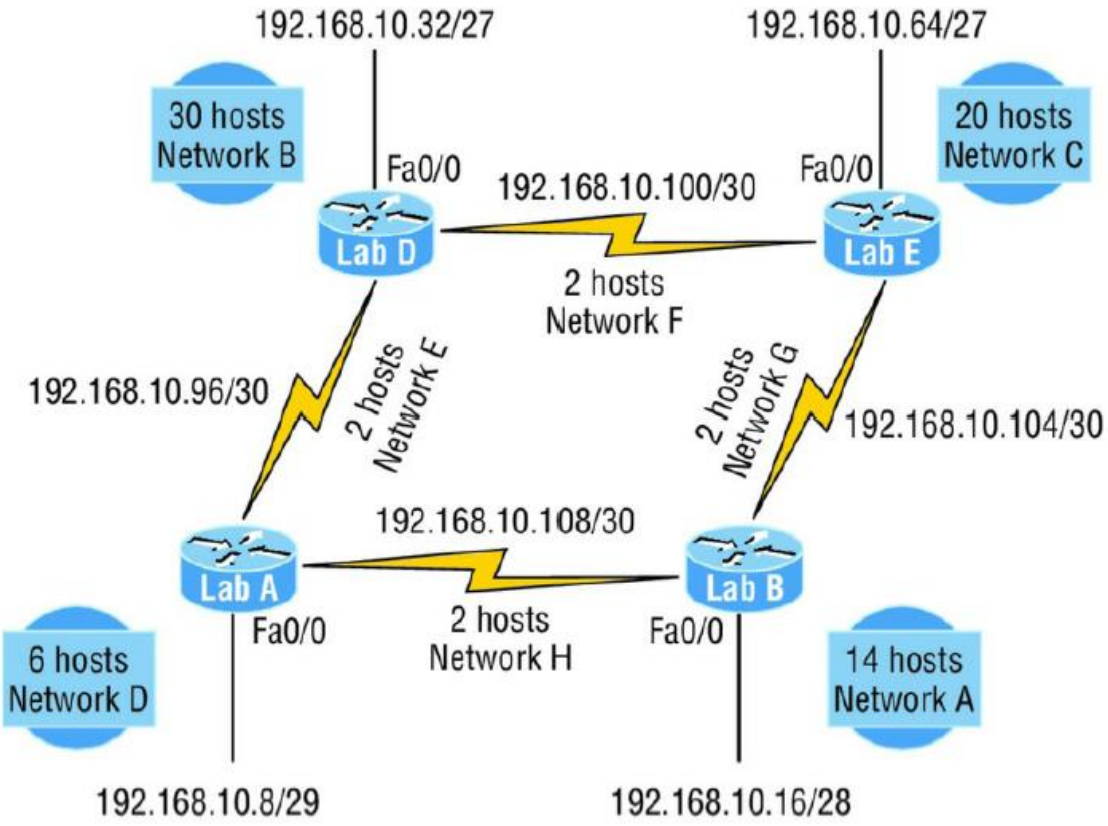

Figure 3.4 VLSM Network 1

Subnet	Mask	Subnets	Hosts	Block
/25	128	2	126	128
/26	192	4	62	64
/27	224	8	30	32
/28	240	16	14	16
/29	248	32	6	8
/30	252	64	2	4

Network	Hosts	Block	Subnet	Mask
A	14	16	/28	240
B	30	32	/27	224
C	20	32	/27	224
D	6	8	/29	248
E	2	4	/30	252
F	2	4	/30	252
G	2	4	/30	252
H	2	4	/30	252

Figure 3.5 VLSM Table 1

There are two important things to note here. The first is that we still have plenty of room for growth with this VLSM network design. The second point is that we could never achieve this goal with one subnet mask using classful routing.

Let's do another one. Figure 3.6 shows a network with 11 networks, two block sizes of 64, one of 32, five of 16, and three of 4.

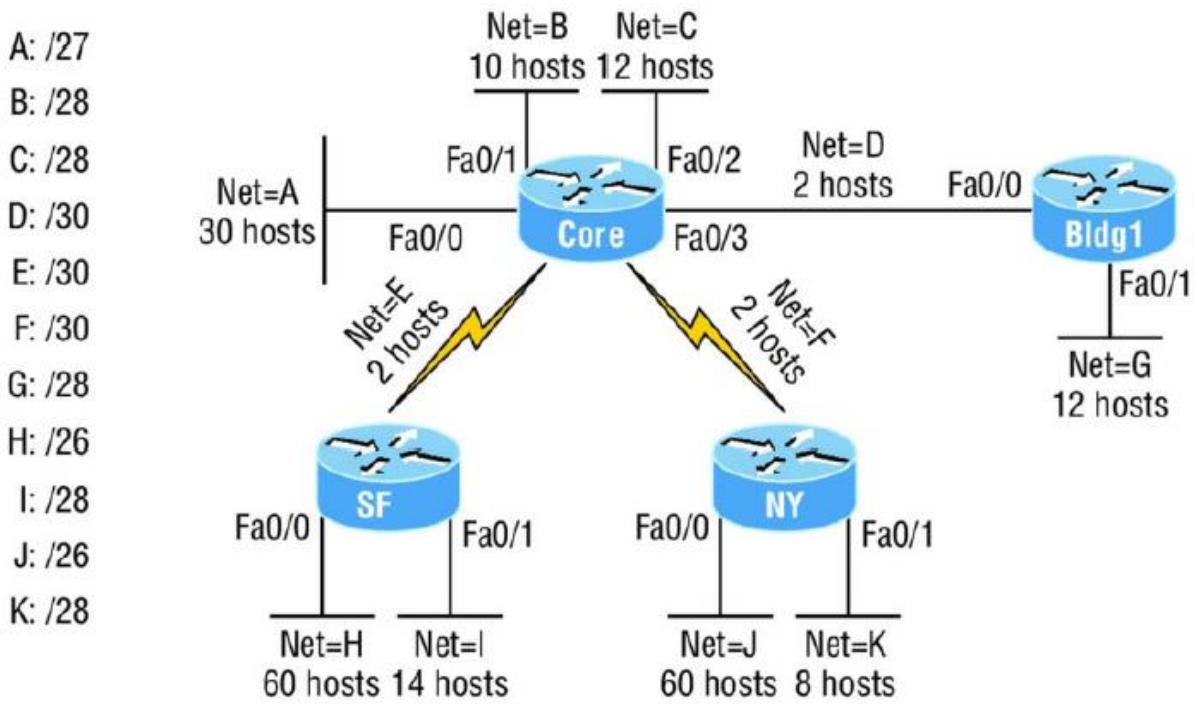

Figure 3.6 VLSM Network 2

First, create your VLSM table and use your block size chart to fill in the table with the subnets you need. Figure 3.7 shows a possible solution.

Notice that I filled in this entire chart and only have room for one more block size of 4. You can only gain that amount of address space savings with a VLSM network!

Keep in mind that it doesn't matter where you start your block sizes as long as you always begin counting from zero. For example, if you had a block size of 16, you must start at 0 and incrementally progress from there—0, 16, 32, 48, and so on. You can't start with a block size of 16 or some value like 40, and you can't progress using anything but increments of 16.

Here's another example. If you had block sizes of 32, start at zero like this: 0, 32, 64, 96, etc. Again, you don't get to start wherever you want; you must always start counting from zero. In the example in Figure 3.7, I started at 64 and 128, with my two block sizes of 64. I didn't have much choice because my options are 0, 64, 128, and 192. However, I added the block size of 32, 16, 8, and 4 elsewhere, but they were always in the correct increments required of the specific block size. Remember that if you always start with the largest blocks first, then make your way to the smaller blocks sizes, you will automatically fall on an increment boundary. It also guarantees that you are using your address space in the most effective way.

Subnet	Mask	Subnets	Hosts	Block
/25	128	2	126	128
/26	192	4	62	64
/27	224	8	30	32
/28	240	16	14	16
/29	248	32	6	8
/30	252	64	2	4

Network	Hosts	Block	Subnet	Mask
A				
B				
C				
D				
E				
F				
G				
H				
I				
J				
K				

Figure 3.7 VLSM Table 2

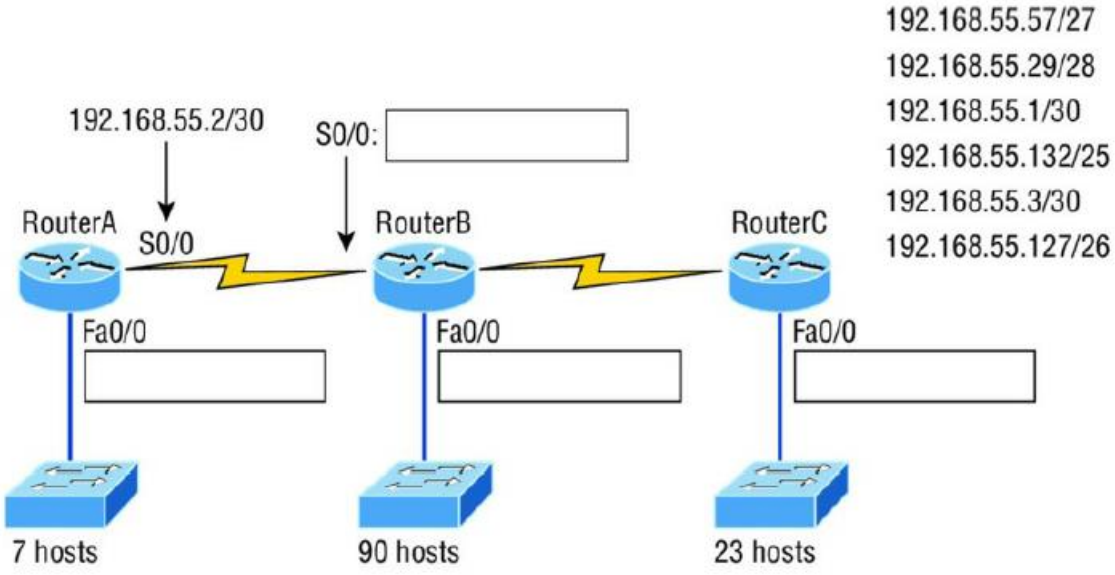

Figure 3.8 VLSM Design 1

From the list of IP addresses on the right of the figure, which IP address do you think will be placed in each router's FastEthernet 0/0 interface and serial 0/0 of Router B?

To answer this, look for clues in Figure 2.8. The first is that interface S0/0 on RouterA has IP address 192.168.55.2/30 assigned, which makes for an easy answer because A /30 is 255.255.255.252, which gives you a block size of 4. Your subnets are 0, 4, 8, etc. Since the known host has an IP address of 2, the only other valid host in the zero subnet is 1, so the third answer down is the right one for the S0/0 interface of Router B.

The next clues are the listed number of hosts for each of the LANs. RouterA needs 7 hosts—a block size of 16 (/28). RouterB needs 90 hosts—a block size of 128 (/25). And RouterC needs 23 hosts—a block size of 32 (/27).

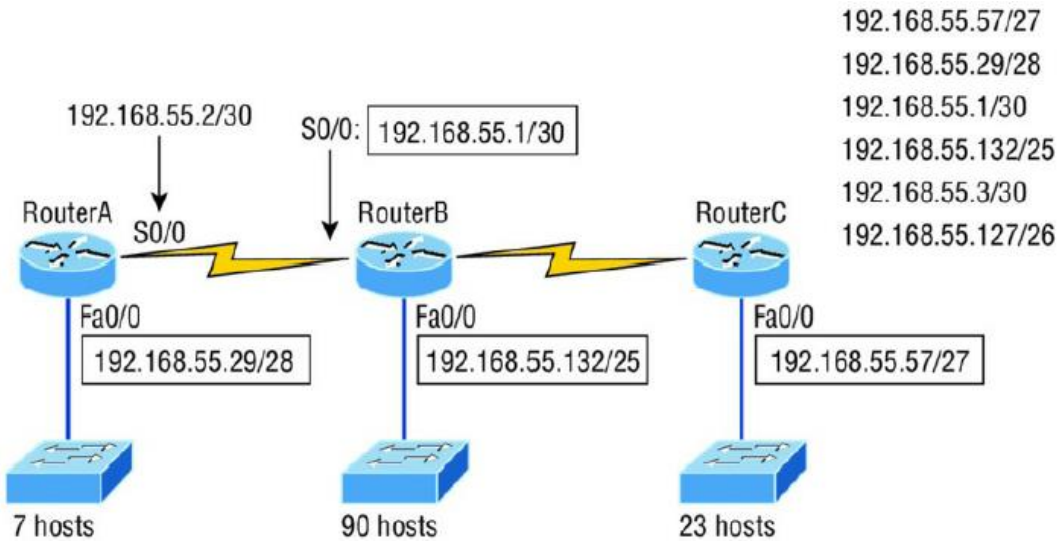

Figure 3.9 Solution to VLSM Design 1

This is actually pretty simple because once you've figured out the block size needed for each LAN, all you need to get to the right solution is to identify proper clues and, of course, know your block sizes well!

One last example of VLSM design before we move on to summarization. Figure 2.10 shows three routers, all running RIPv2. Which Class C addressing scheme would you use to maintain the needs of this network while saving as much address space as possible?

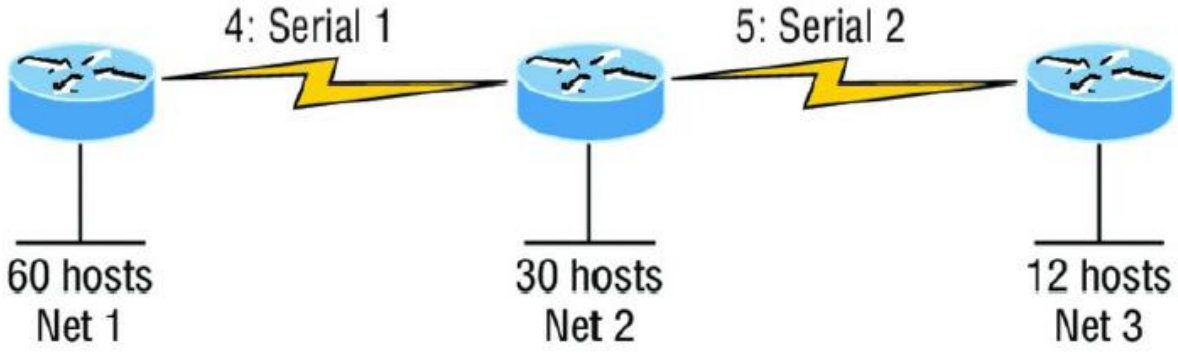

Figure 3.10 VLSM Design 2

This is actually a pretty clean network design that's just waiting for you to fill out the chart. There are block sizes of 64, 32, and 16 and two block sizes of 4. Coming up with the right solution should be a slam dunk! Take a look at my answer in Figure 3.11.

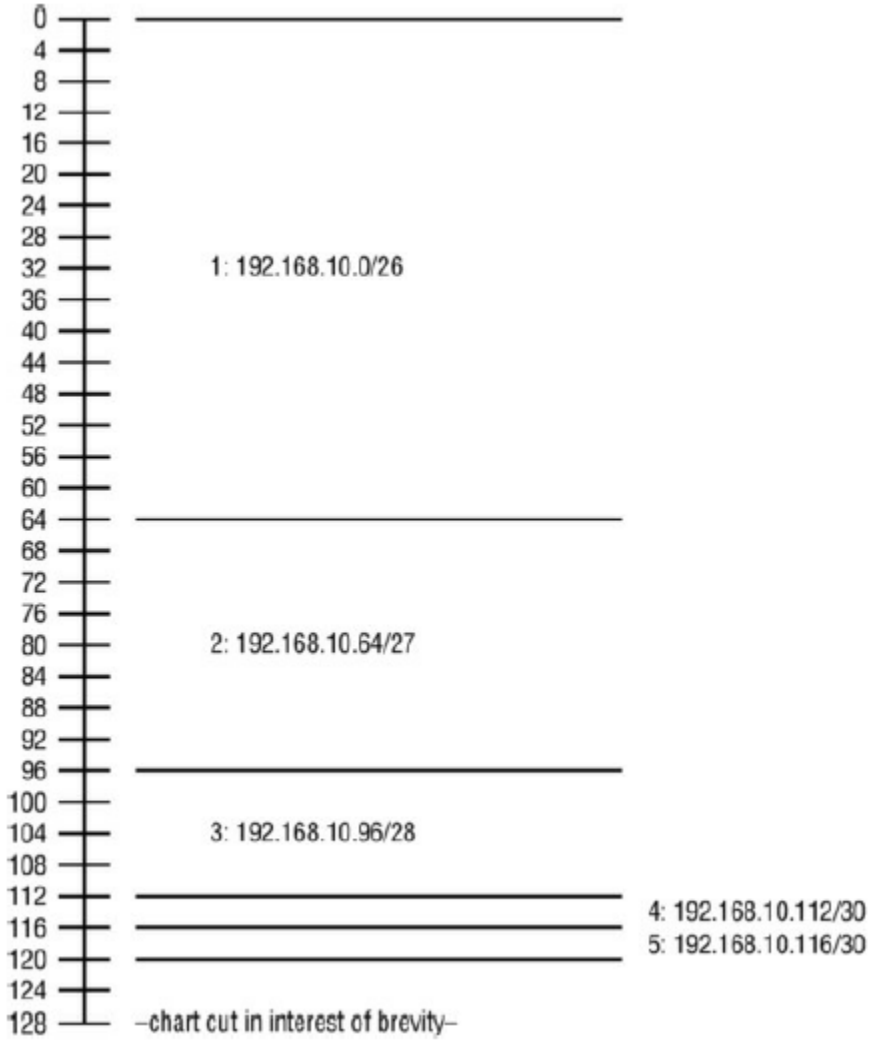

Figure 3.11 Solution to VLSM Design 2

My solution began at subnet 0, and I used the block size of 64. Clearly, I didn't have to go with a block size of 64 because I could've chosen a block size of 4 instead. But I didn't because I usually like to start with the largest block size and move to the smallest. With that done, I added the block sizes of 32 and 16 as well as the two block sizes of 4. This solution is optimal because it still leaves lots of room to add subnets to this network!

6.4 Determining IP Address Problems

It's common for a host, router, or other network device to be configured with the wrong IP address, subnet mask, or default gateway. Because this happens way too often, you must know how to find and fix IP address configuration errors. A good way to start is to draw out the network and IP addressing scheme. If that's already been done, consider yourself lucky because though sensible, it's rarely done. Even if it is, it's usually outdated or inaccurate anyway. So either way, it's a good idea to bite the bullet and start from scratch.

Once you have your network accurately drawn out, including the IP addressing scheme, you need to verify each host's IP address, mask, and default gateway address to establish the problem. Of course, this is assuming that you don't have a physical layer problem, or if you did, that you've already fixed it.

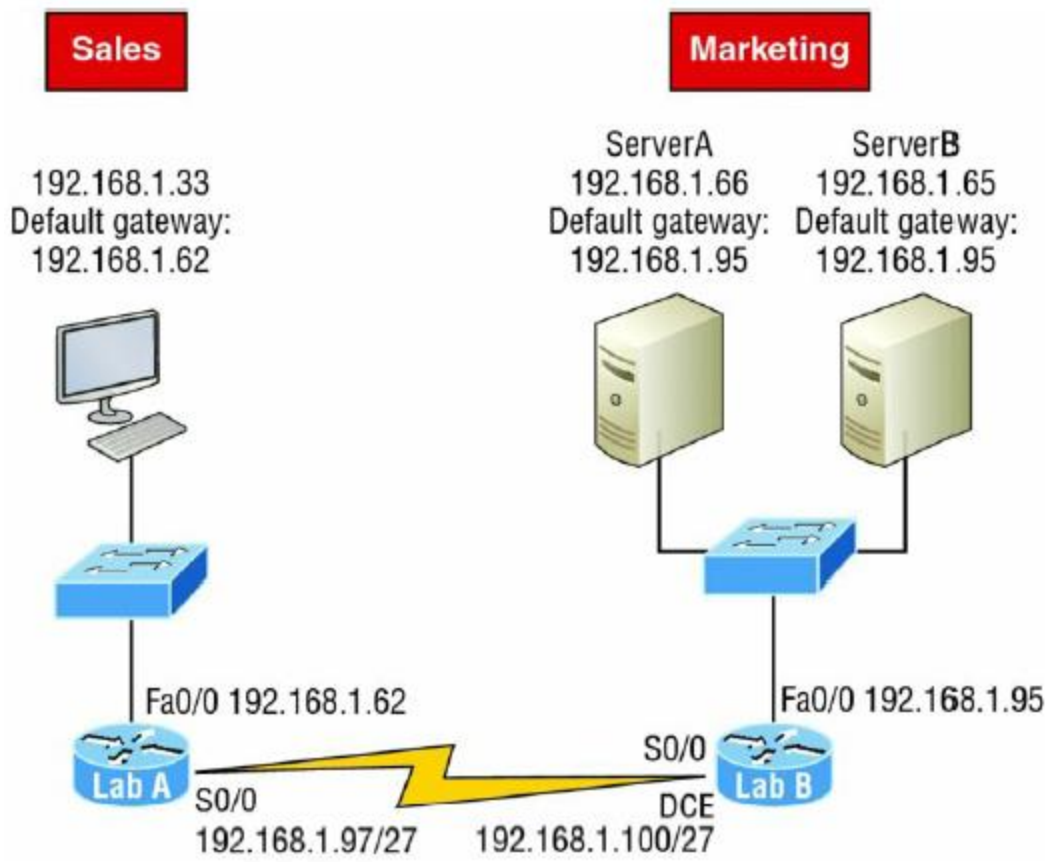

Figure 3.12 IP address problem 1

A user in the sales department calls and tells you that she can't get to ServerA in the marketing department. You ask her if she can get to ServerB in the marketing department, but she doesn't know because she doesn't have rights to log on to that server. What do you do?

First, guide your user through the four troubleshooting steps you learned in the preceding section. Okay—let's say steps 1 through 3 work but step 4 fails. By looking at the figure, can you determine the problem? Look for clues in the network drawing. First, the WAN link between the Lab A router and the Lab B router shows the mask as a /27. You should already know that this mask is 255.255.255.224 and determine that all networks are using this mask. The network address is 192.168.1.0. What are our valid subnets and hosts? 256 – 224 = 32, so this makes our subnets 0, 32, 64, 96, 128, etc. So, by looking at the figure, you can see that subnet 32 is being used by the sales department. The WAN link is using subnet 96, and the marketing department is using subnet 64.

Now you've got to establish what the valid host ranges are for each subnet. From what you learned at the beginning of this chapter, you should now be able to easily determine the subnet address, broadcast addresses, and valid host ranges. The valid hosts for the Sales LAN are 33 through 62, and the broadcast address is 63 because the next subnet is 64, right? For the Marketing LAN, the valid hosts are 65 through 94 (broadcast 95), and for the WAN link, 97 through 126

(broadcast 127). By closely examining the figure, you can determine that the default gateway on the Lab B router is incorrect. That address is the broadcast address for subnet 64, so there's no way it could be a valid host!

Did you get all that? Let's try another one to make sure. Figure 3.13 shows a network problem.

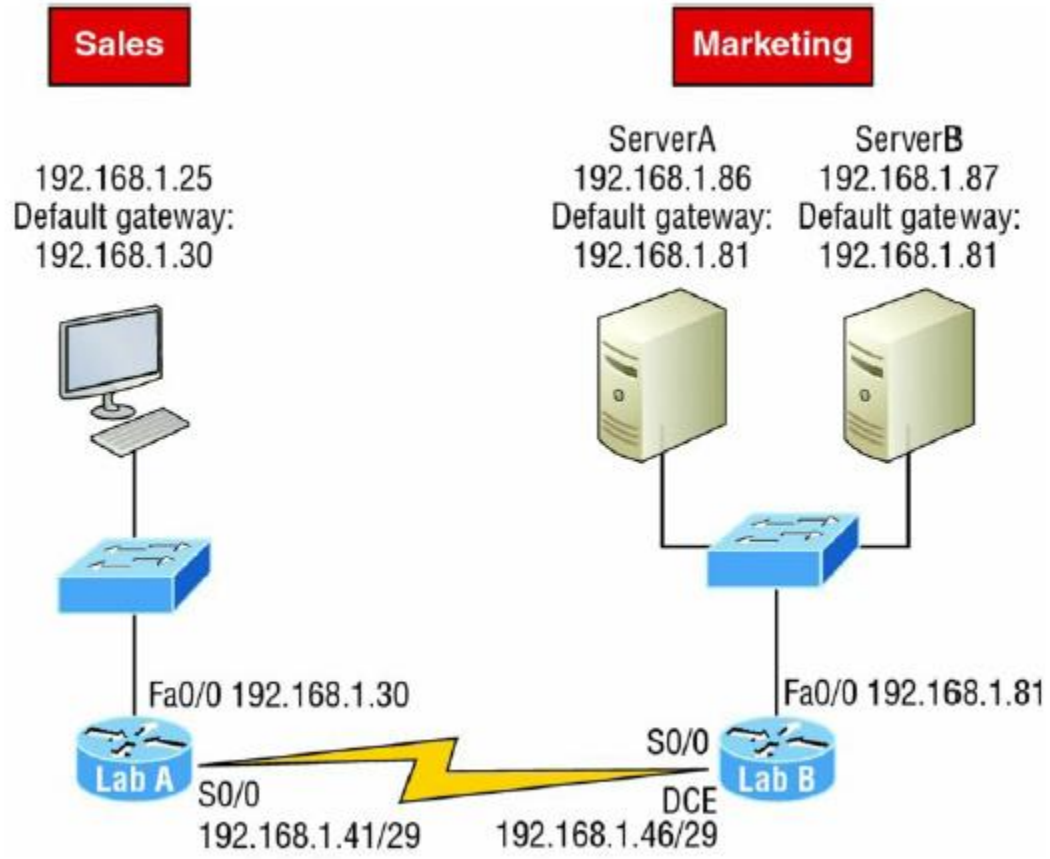

Figure 3.13 IP address problem 2

A user in the Sales LAN can't get to Server B. You have the user run through the four basic troubleshooting steps and find that the host can communicate to the local network but not to the remote network. Find and define the IP addressing problem.

If you went through the same steps used to solve the last problem, you can see that first, the WAN link again provides the subnet mask to use— /29, or 255.255.255.248. Assuming classful addressing, you need to determine what the valid subnets, broadcast addresses, and valid host ranges are to solve this problem.

The 248 mask is a block size of 8 (256 – 248 = 8, as discussed in Chapter 4), so the subnets both start and increment in multiples of 8. By looking at the figure, you see that the Sales LAN is in the 24 subnet, the WAN is in the 40 subnet, and the Marketing LAN is in the 80 subnet. Can you see the problem yet? The valid host range for the Sales LAN is 25–30, and the configuration

appears correct. The valid host range for the WAN link is 41–46, and this also appears correct. The valid host range for the 80 subnet is 81–86, with a broadcast address of 87 because the next subnet is 88. Server B has been configured with the broadcast address of the subnet.

Okay, now that you can figure out misconfigured IP addresses on hosts, what do you do if a host doesn't have an IP address and you need to assign one? What you need to do is scrutinize the other hosts on the LAN and figure out the network, mask, and default gateway. Let's take a look at a couple of examples of how to find and apply valid IP addresses to hosts.

You need to assign a server and router IP addresses on a LAN. The subnet assigned on that segment is 192.168.20.24/29. The router needs to be assigned the first usable address and the server needs the last valid host ID. What is the IP address, mask, and default gateway assigned to the server?

To answer this, you must know that a /29 is a 255.255.255.248 mask, which provides a block size of 8. The subnet is known as 24, the next subnet in a block of 8 is 32, so the broadcast address of the 24 subnet is 31 and the valid host range is 25–30.
Server IP address: 192.168.20.30
Server mask: 255.255.255.248
Default gateway: 192.168.20.25 (router's IP address)

Take a look at Figure 3.14 and solve this problem.

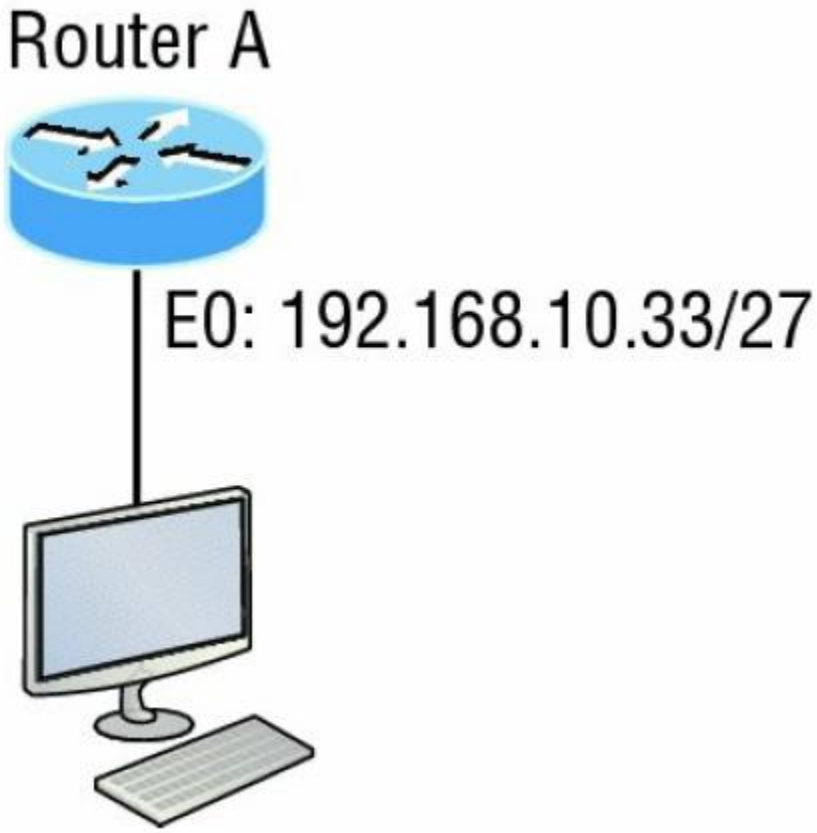

Figure 3.14 Find the valid host #1

Look at the router's IP address on Ethernet0. What IP address, subnet mask, and valid host range could be assigned to the host?

The IP address of the router's Ethernet0 is 192.168.10.33/27. As you already know, a /27 is a 224 mask with a block size of 32. The router's interface is in the 32 subnet. The next subnet is 64, so that makes the broadcast address of the 32 subnet 63 and the valid host range 33–62.

Host IP address: 192.168.10.34–62 (any address in the range except for 33, which is assigned to the router)
Mask: 255.255.255.224
Default gateway: 192.168.10.33

Figure 3.15 shows two routers with Ethernet configurations already assigned. What are the host addresses and subnet masks of Host A and Host B?

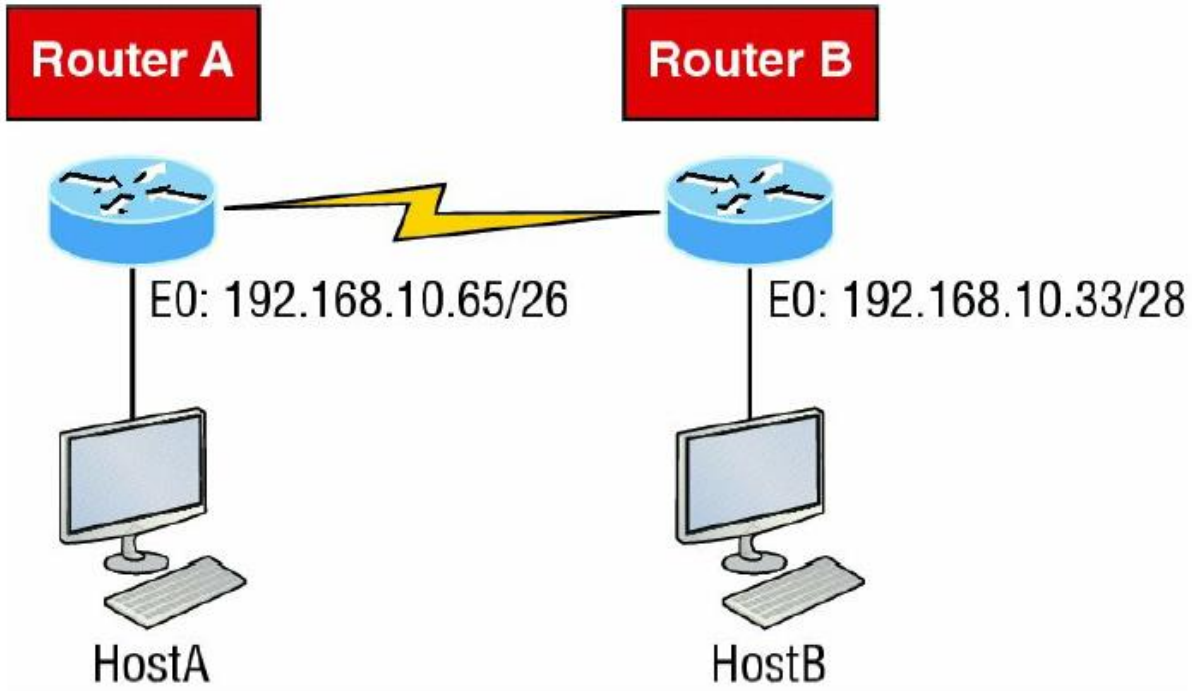

Figure 3.15 Find the valid host #2

Router A has an IP address of 192.168.10.65/26 and Router B has an IP address of 192.168.10.33/28. What are the host configurations? Router A Ethernet0 is in the 192.168.10.64 subnet and Router B Ethernet0 is in the 192.168.10.32 network.
Host A IP address: 192.168.10.66–126
Host A mask: 255.255.255.192
Host A default gateway: 192.168.10.65
Host B IP address: 192.168.10.34–46
Host B mask: 255.255.255.240

Host B default gateway: 192.168.10.33

Exercise

Solve VLSM for the following problems and find Network address, Broadcast address, valid host range and subnet mask for the first two and last two subnetworks.

1. 187.170.2.0/24. Hosts- 32, 20, 2, 14
2. 10.0.0.0/18, Hosts- 290, 505, 60, 198, 8, 29
3. 10.0.0.0/16, Hosts- 3797, 970, 1794, 235, 490, 59, 25, 115, 5
4. 172.16.0.0./17, Hosts- 3920, 1779, 2090, 290, 715, 128, 48
5. 172.16.0.0/17, Hosts- 1509, 2350, 127, 509, 64, 17
6. 192.168.0.0/24, Hosts- 128, 16, 3, 65